TL28R-3

2015.24.06

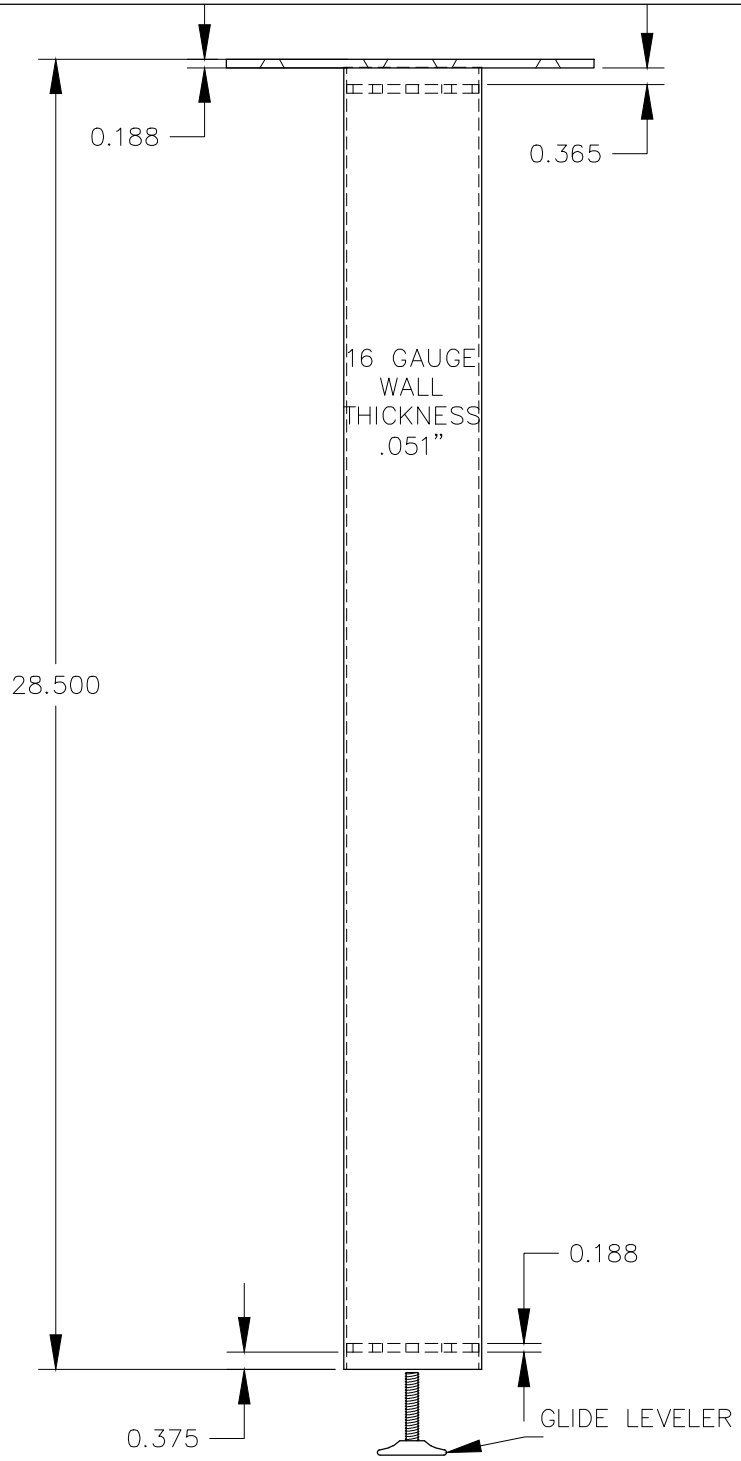

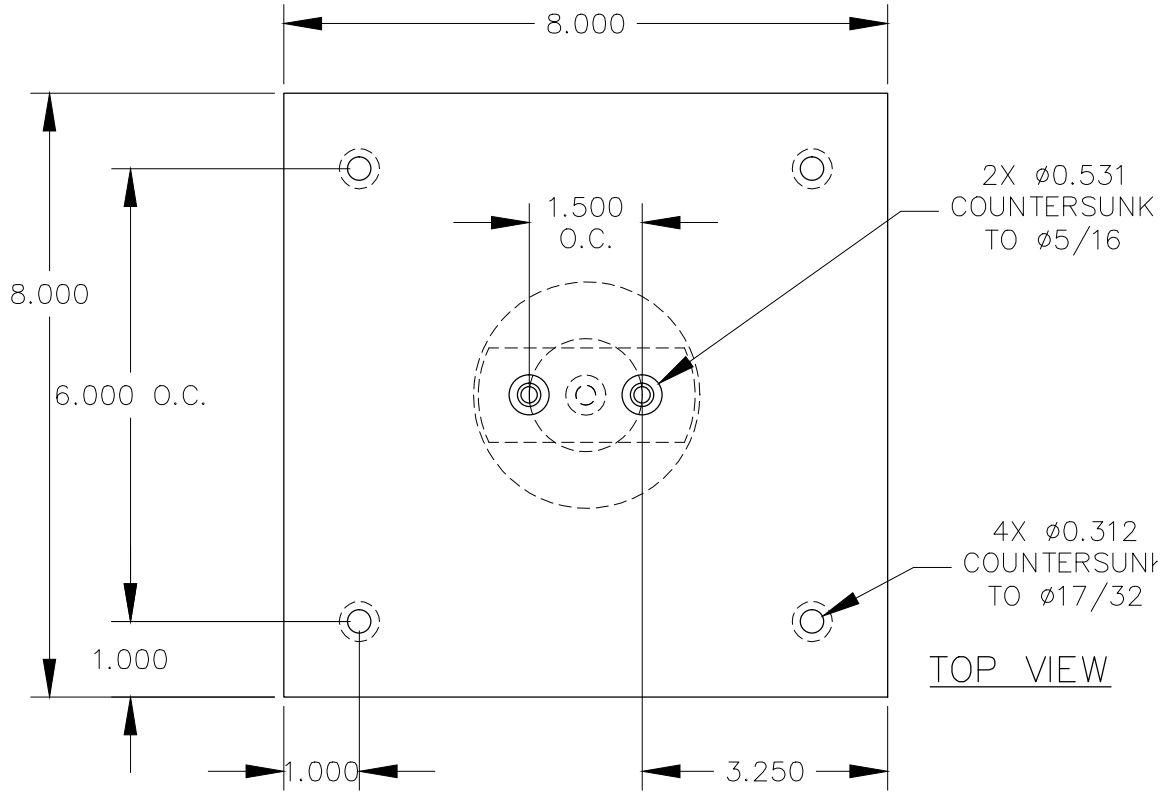

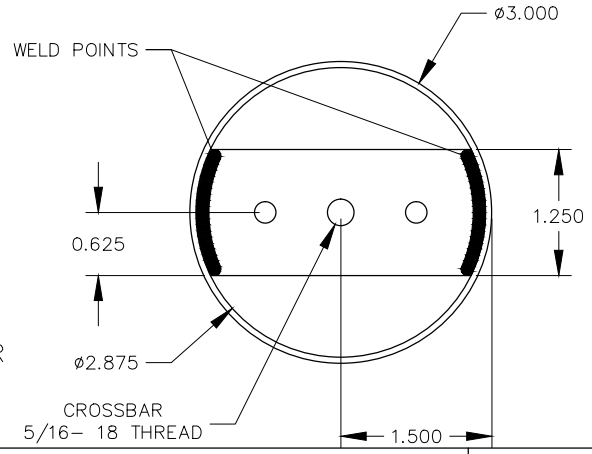

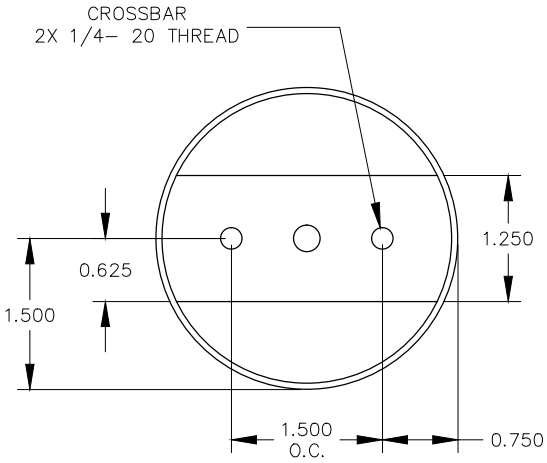

MOCKETT
DOUG MOCKETT & COMPANY, INC

P.O. BOX 3333
MANHATTAN BEACH, CA 90266 USA
PHONE: 310.318.2491 FAX: 310.376.7650
email: info@mockett.com www.mockett.com

PROPRIETY AND CONFIDENTIAL.

ALL DIMENSIONS HAVE A +/- 1/32" TOLERANCE UNLESS OTHERWISE SPECIFIED. WE DO NOT RECOMMEND DRILLING OR CUTTING ANY HOLES BEFORE RECEIVING A PRODUCT OR A PRODUCT SAMPLE.
ALL MEASUREMENTS ARE IN INCHES.

PART NAME:	DRAWN BY:	LAST EDITED:	REQUESTED BY:	SHEET:
TL28R-3	DMC	-	-	1 OF 1

SCALE:	TOLERANCE:	DATE:	DATE:	APPROVED BY:
N.T.S.	± 1 / 32 "	2015.24-15	0000.00.00 12:00am	-