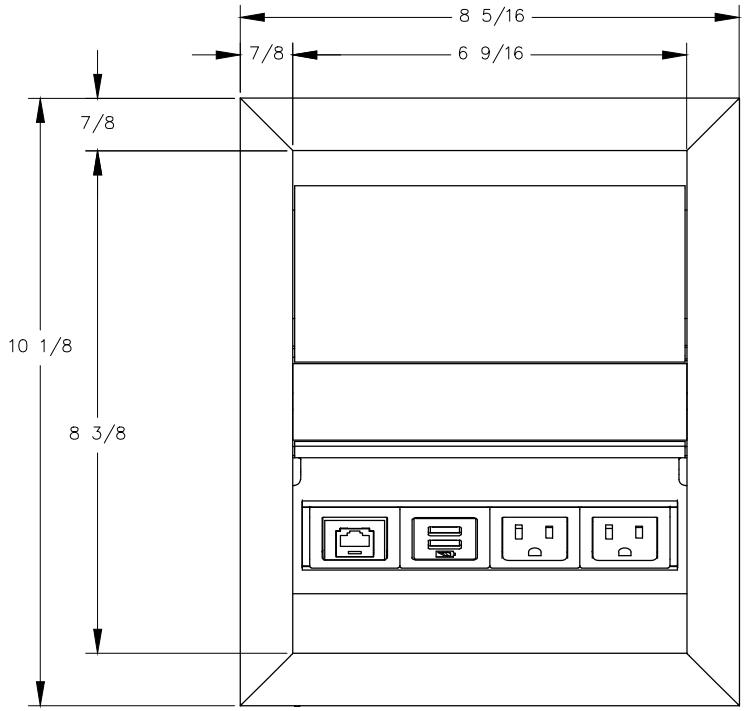

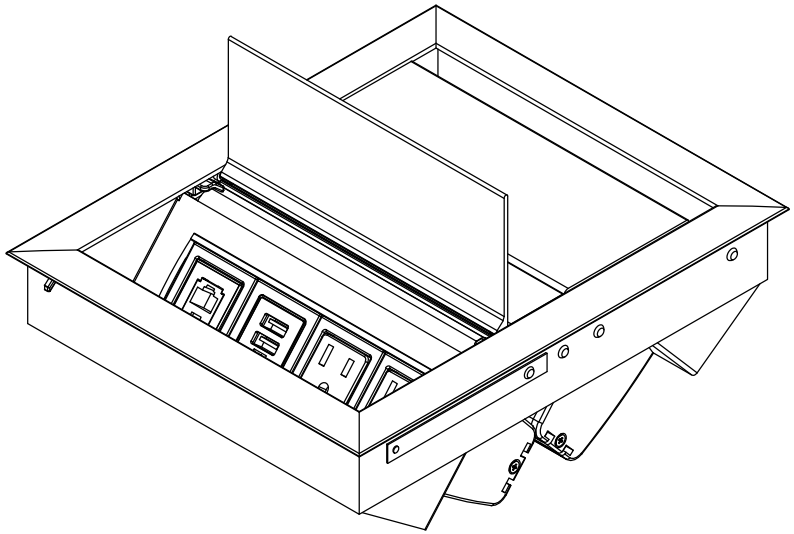

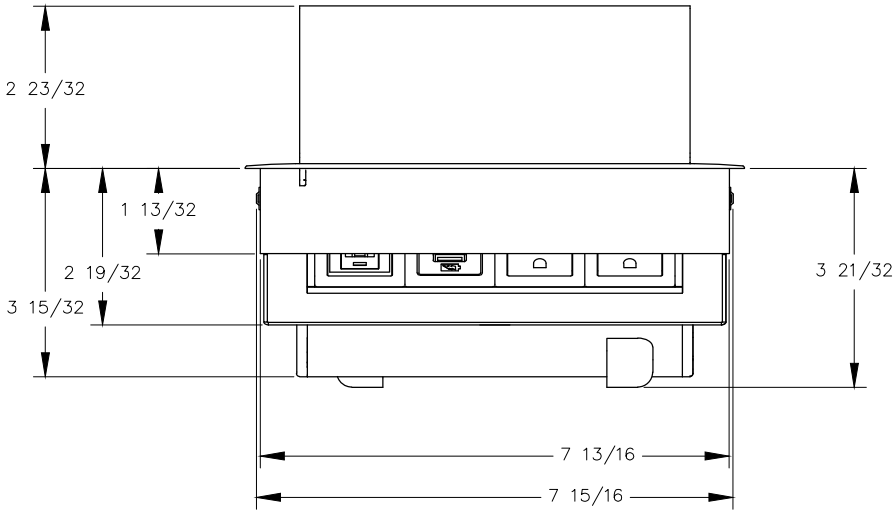

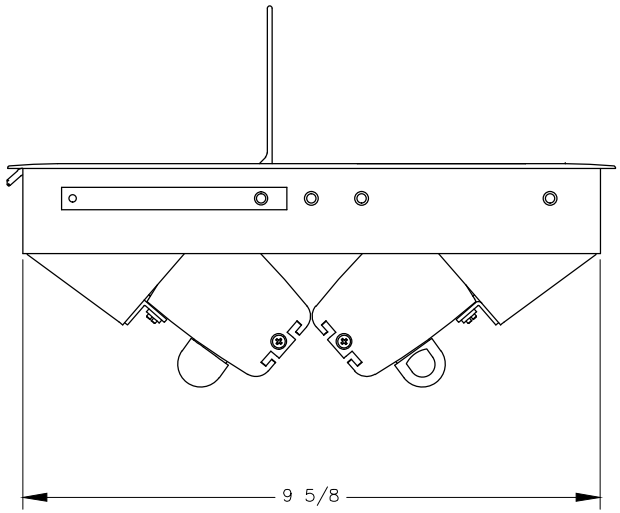

MOCKETT
DOUG MOCKETT & COMPANY, INC
P.O. BOX 3333
MANHATTAN BEACH, CA 90266 USA
PHONE: 310.318.2491 FAX: 310.376.7650
email: info@mockett.com www.mockett.com

PROPRIETY AND CONFIDENTIAL.
ALL DIMENSIONS HAVE A +/- 1/32" TOLERANCE UNLESS OTHERWISE SPECIFIED. WE DO NOT RECOMMEND DRILLING OR CUTTING ANY HOLES BEFORE RECEIVING A PRODUCT OR A PRODUCT SAMPLE.
ALL MEASUREMENTS ARE IN INCHES.

PART NAME:		DRAWN BY:	LAST EDITED:	REQUESTED BY:	SHEET:
PCS54/2/E		VENDOR - 3D	AN	-	1 OF 1
SCALE: AS NOTED	TOLERANCE: - / + 1 / 32 " UNLESS SPECIFIED	DATE: 0000.00.00	DATE: 2015.04.08 12:00am	APPROVED BY: -	