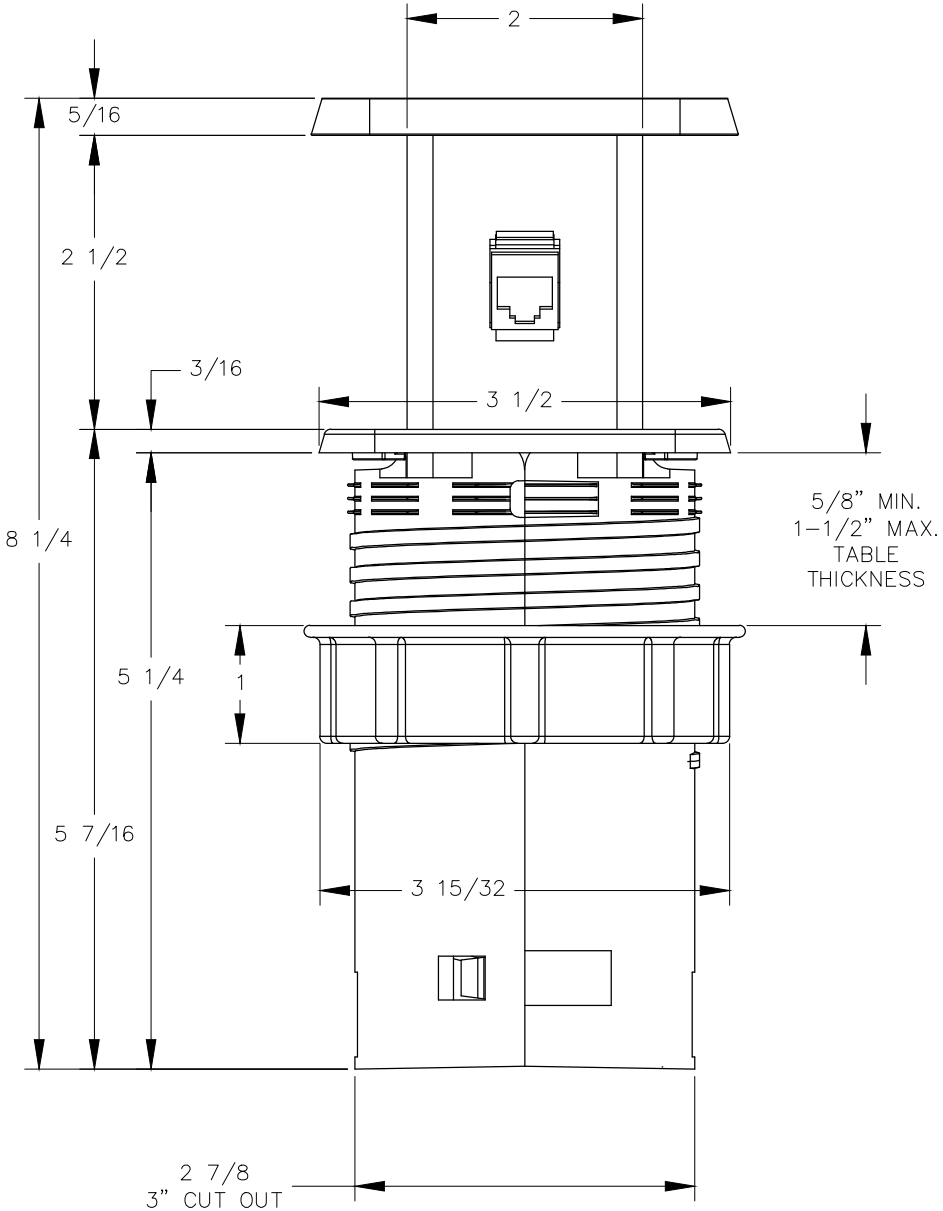

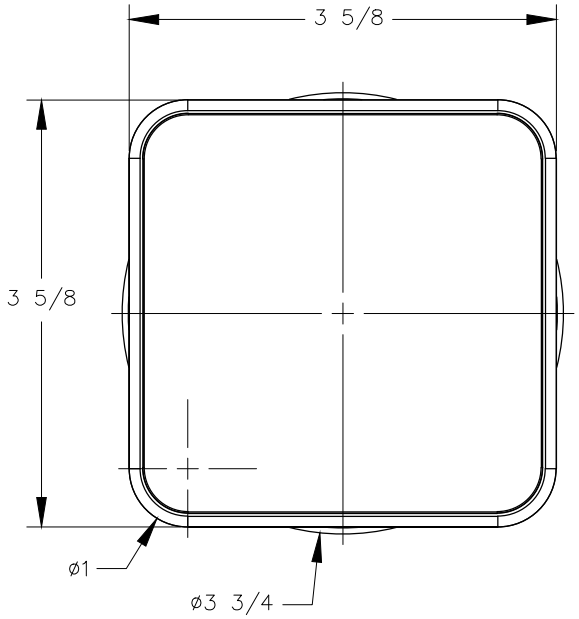

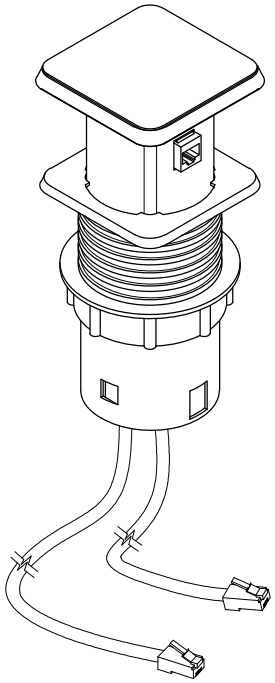

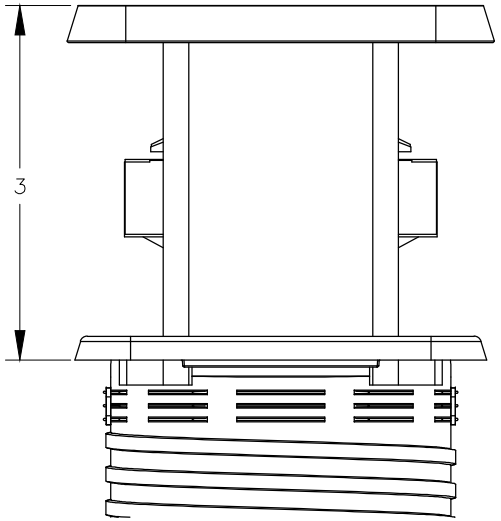

MOCKETT
DOUG MOCKETT & COMPANY, INC
P.O. BOX 3333
MANHATTAN BEACH, CA 90266 USA
PHONE: 310.318.2491 FAX: 310.376.7650
email: info@mockett.com www.mockett.com

PROPRIETARY AND CONFIDENTIAL.
ALL DIMENSIONS HAVE A +/- 1/32" TOLERANCE UNLESS OTHERWISE SPECIFIED. WE DO NOT RECOMMEND DRILLING OR CUTTING ANY HOLES BEFORE RECEIVING A PRODUCT OR A PRODUCT SAMPLE.
ALL MEASUREMENTS ARE IN INCHES.

PART NAME:	DRAWN BY:	LAST EDITED:	REQUESTED BY:	SHEET:
PCS39DD	PM	CFH	-	1 OF 1

SCALE:	TOLERANCE:	DATE:	DATE:	APPROVED BY:
AS NOTED	- / + 1 / 32 " UNLESS SPECIFIED	-	2019.04.08 11:00am	-