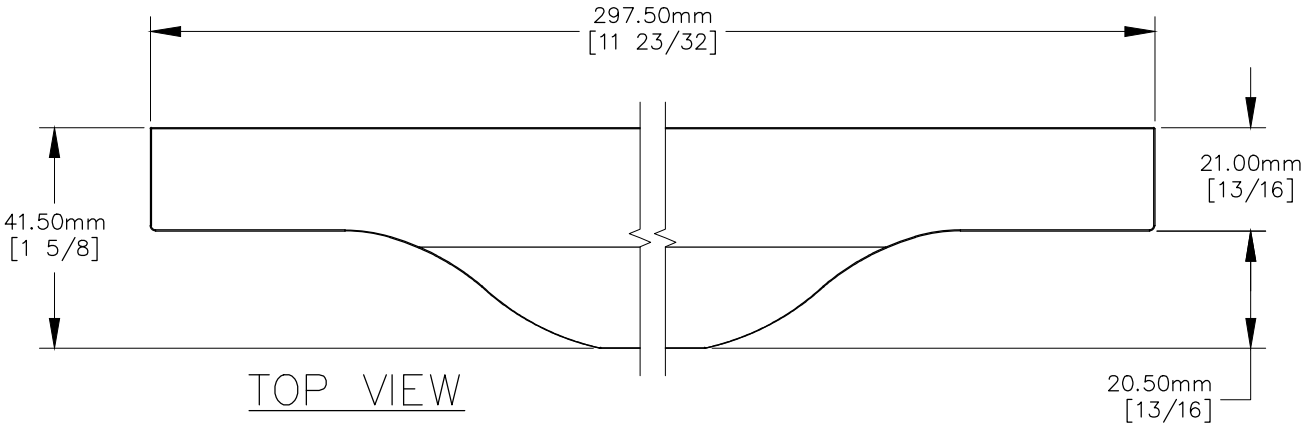

TOP VIEW

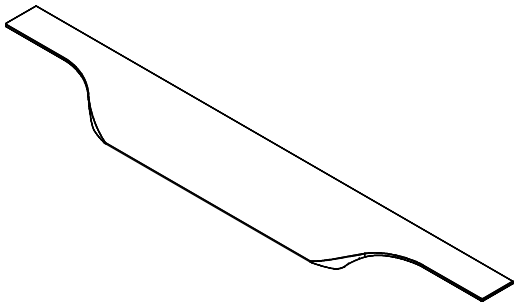

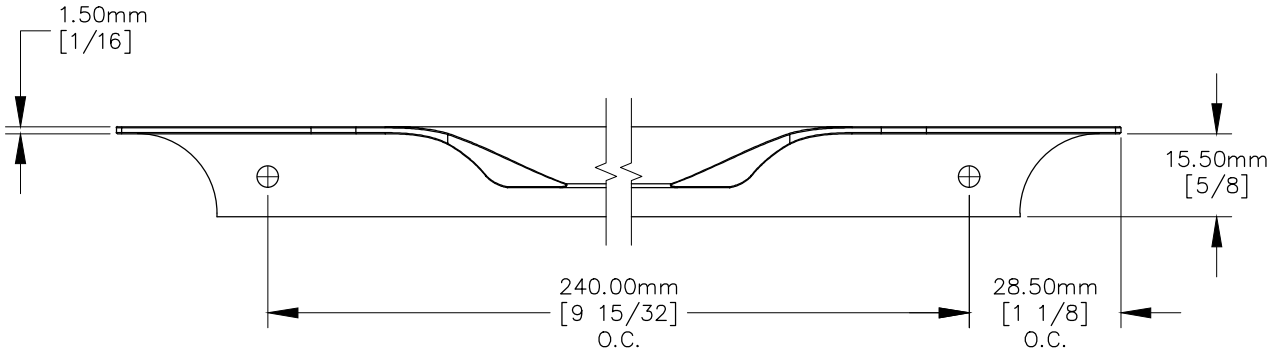

FRONT VIEW

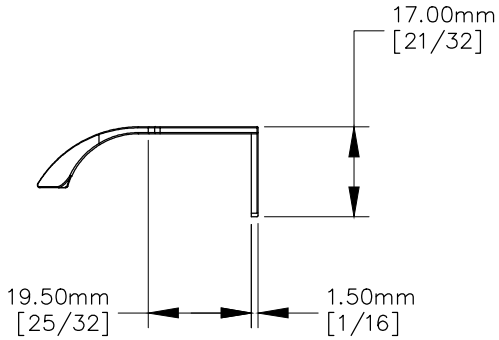

SIDE VIEW

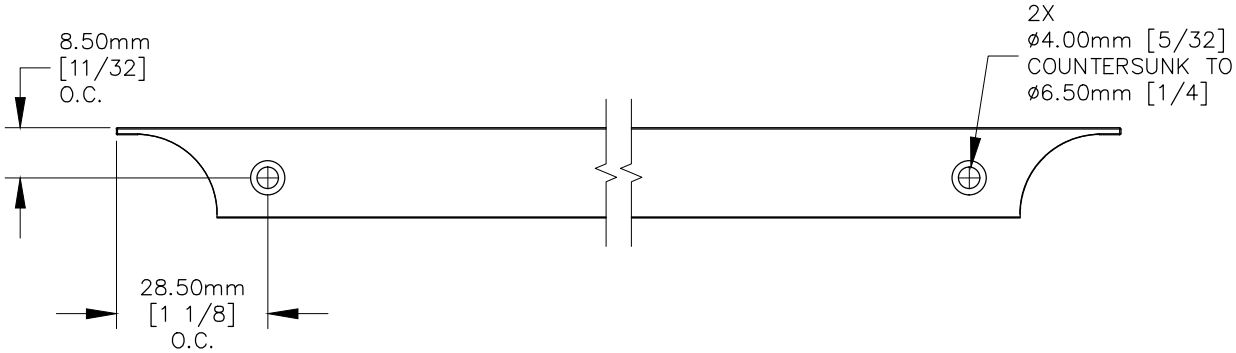

REAR VIEW

NOTE:

1. Front drawer panel thickness is 3/4 MAX.

MOCKETT
DOUG MOCKETT & COMPANY, INC
P.O. BOX 3333
MANHATTAN BEACH, CA 90266 USA
PHONE: 310.318.2491 FAX: 310.376.7650
email: info@mockett.com www.mockett.com

PROPRIETARY AND CONFIDENTIAL.
ALL DIMENSIONS HAVE A +/- 1/32" TOLERANCE UNLESS OTHERWISE SPECIFIED. WE DO NOT RECOMMEND DRILLING OR CUTTING ANY HOLES BEFORE RECEIVING A PRODUCT OR A PRODUCT SAMPLE.
ALL MEASUREMENTS ARE IN INCHES.

PART NAME:		DRAWN BY:	LAST EDITED:	REQUESTED BY:	SHEET:
DP287B		TWR	TWR	RN	1 OF 1
SCALE: N.T.S.	TOLERANCE: ± 1 / 32 "	DATE: 2020.10.09	DATE: 2020.11.04 12:00am	APPROVED BY: -	