MOCKETT

DOUG MOCKETT & COMPANY, INC.

PART # POS/DWR2B

310.318.2491 • 800.523.1269 • www.mockett.com

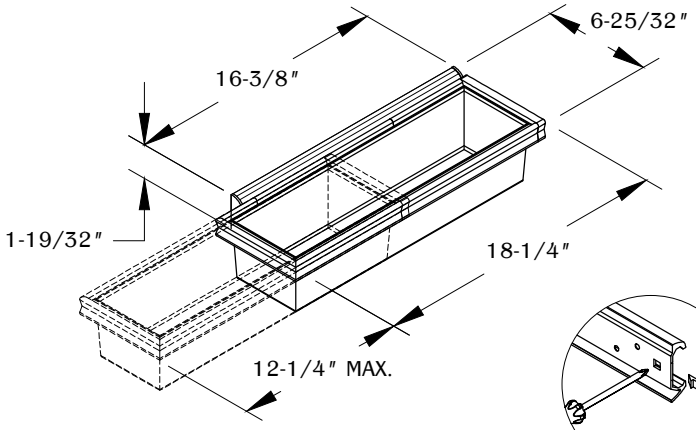

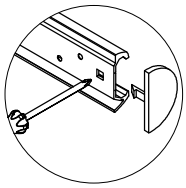

Insert screw driver to push out locking tab.

TRAY:	
DEPTH	3-9/16″
LENGTH	17-1/4″
WIDTH	4-21/32″

1

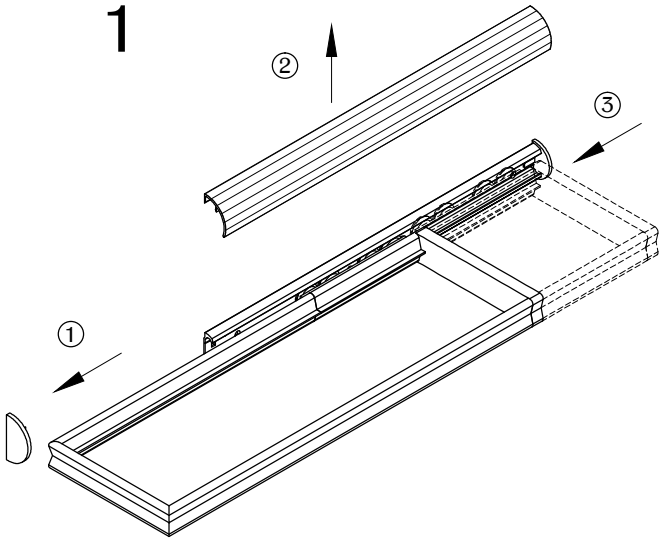

2

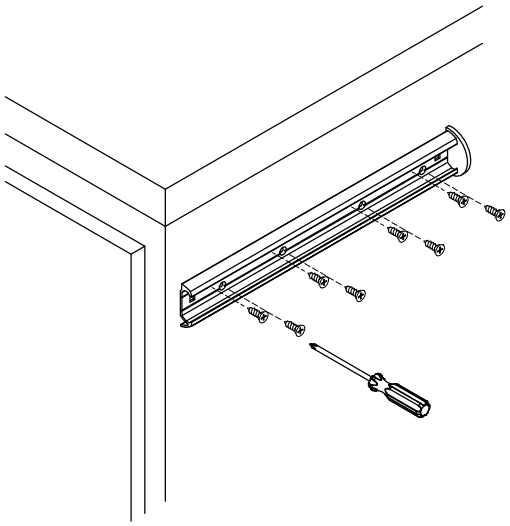

3

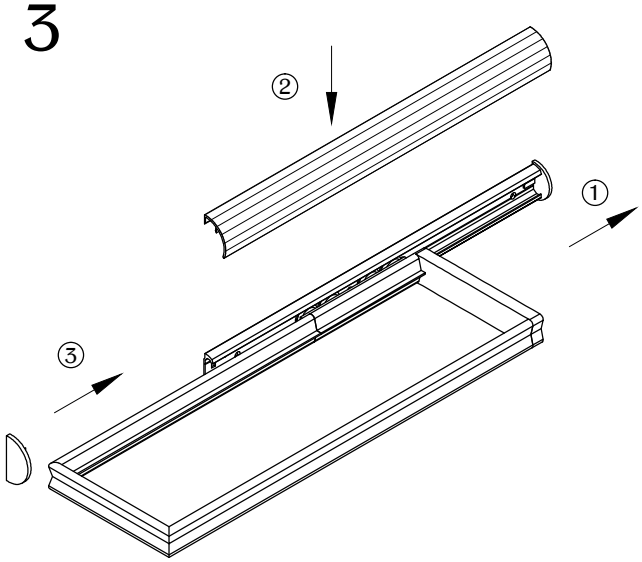

TABLE OF CONTENTS:

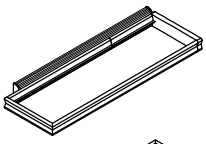

. . . . 1x POS/DWR2B

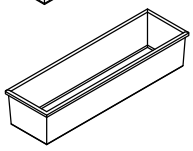

. . . . . 1x PLASTIC TRAY

. . . . . 8x WOOD SCREW