MOCKETT

DOUG MOCKETT & COMPANY, INC.

310.318.2491 • 800.523.1269 • www.mockett.com

PCS60B

PROPRIETARY AND CONFIDENTIAL.
ALL DIMENSIONS HAVE A +/- 1/16" TOLERANCE UNLESS OTHERWISE SPECIFIED. WE DO NOT RECOMMEND DRILLING OR CUTTING ANY HOLES BEFORE RECEIVING A PRODUCT OR A PRODUCT SAMPLE.

⚠ WARNING ⚠

- For indoor use only.
- For use on a normally dry work surface.
- If any malfunction occurs, do not attempt to disassemble or repair.
- Avoid placing the unit in a high temperature environment or near fire.

SPECIFICATIONS

- 5 ft. cord length.
- Plug dimension is 1-11/32″ X 1-1/32″ X 7/8″.
- Please use applicable adapter from data tree.
  (SEE PCS DATA TREE PAGE FOR MORE INFORMATION.)

TABLE OF CONTENTS

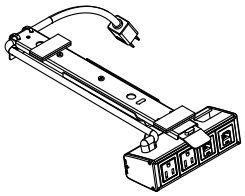

. . . . . 1X PCS60B

. . . . . 2X 10″ Zip tie

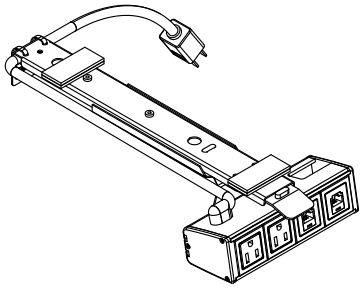

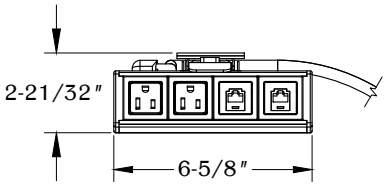

FRONT VIEW

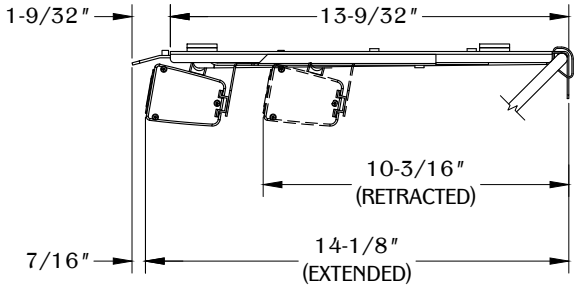

SIDE VIEW

1

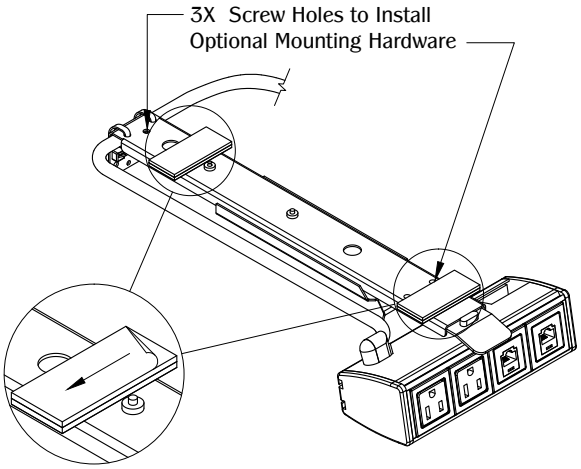

Determine the position and location of the unit on the work surface. Peel adhesive film off the hook and loop fastener. DO NOT separate industrial hook and loop itself. (Note: Mounting hardware not included.)

2

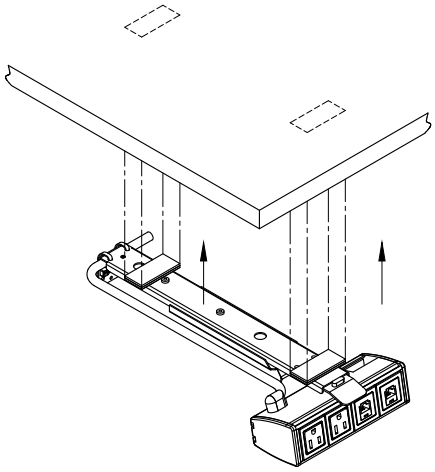

Place PCS60B under desired table top and press firmly.

PROPRIETARY AND CONFIDENTIAL.
ALL DIMENSIONS HAVE A +/- 1/16" TOLERANCE UNLESS OTHERWISE SPECIFIED. WE DO NOT RECOMMEND DRILLING OR CUTTING ANY HOLES BEFORE RECEIVING A PRODUCT OR A PRODUCT SAMPLE.

3

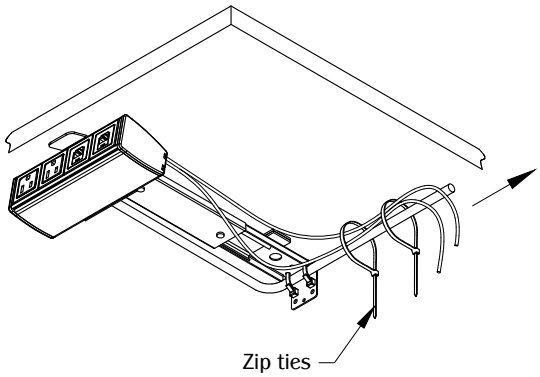

With unit fully extended, attach data cables with the power cord by using zip ties.

4

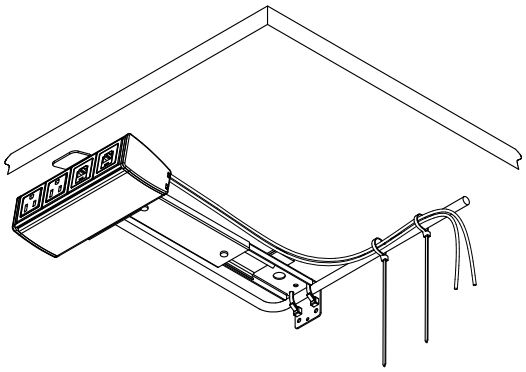

Tighten zip ties.

MOCKETT

DOUG MOCKETT & COMPANY, INC.

310.318.2491 • 800.523.1269 • www.mockett.com

PCS Data Tree

PROPRIETARY AND CONFIDENTIAL.
ALL DIMENSIONS HAVE A +/- 1/32" TOLERANCE UNLESS OTHERWISE SPECIFIED. WE DO NOT RECOMMEND DRILLING OR CUTTING ANY HOLES BEFORE RECEIVING A PRODUCT OR A PRODUCT SAMPLE.

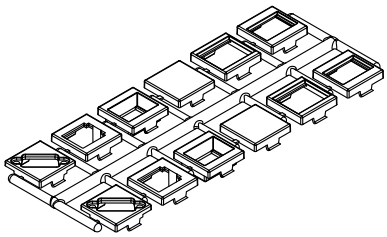

1.) Select the appropriate adapter from the chart below. (example: Panduit Mini-Com Series jack would use "FFF" adapter marked on back of adapter.)

*Jacks, not included, UL Listed (DUXR) or Recognized (DUXR2) jacks required.

Adapter	Manufacturer	Website
BBB	L-Com Keystone Modular	www.L-Com.com
BBB	NETCONNECT, and 110 Connect Series Modular Jack	www.Anixter.com
BBB	Siemon ZMAX Style	www.Siemon.com
BBB	Allen Tel Versa Tap Series	www.Graybar.com
BBB	Leviton Quick Port ® Series	www.Leviton.com
BBB	Belden REVConnect	www.Belden.com
BBB	HDMI Adapter Cable	www.Mockett.com
CCC	Hubbell Nextspeed ™ Keystone Series	www.Hubbell-premise.com
CCC	ADC Truenet Series	www.Anixter.com
DDD	Blank (no coupler/jack)	-
EEE	Ortronics TracJack Series	www.Ortronics.com
FFF	Panduit Mini-Com Series	www.Panduit.com
HHH	Video Monitor Jack/DB-15, panel mount solder style	www.Mockett.com

2.) Snap Jack into adapter following the instructions provided with the jack.

3.) Once assembled, snap adapter into the notched, square holes in the orientation shown.

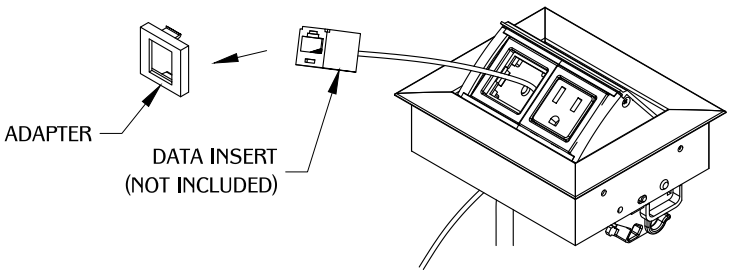

NOTE: Please verify fit of jack in adapter before ordering large quantities as manufacturer designs may change without notice.