MOCKETT

DOUG MOCKETT & COMPANY, INC.

PART # PCS50BU1

310.318.2491 • 800.523.1269 • www.mockett.com

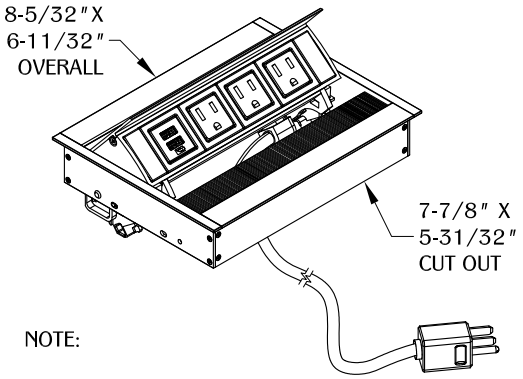

NOTE:

- Do **NOT** remove tape!
- 6 ft. cord length.
- For use on a normally dry work surface.
- Table thickness is 3/4" MIN. to 1-11/16" MAX.
- Plug dimension is 1-11/32" X 1-1/32" X 7/8".
- USB-A ports are for charging use only.

1

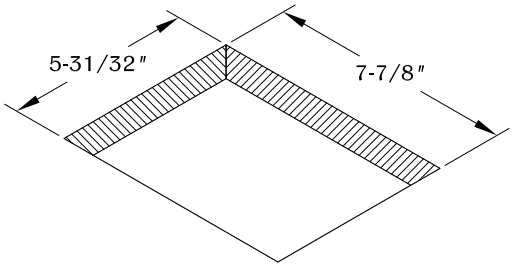

Determine the position and location of the unit on the work surface. Cut the hole at 7-7/8" X 5-31/32". Place and allow enough clearance for unit operation. DO NOT place unit where the cable is strained or trapped.

2

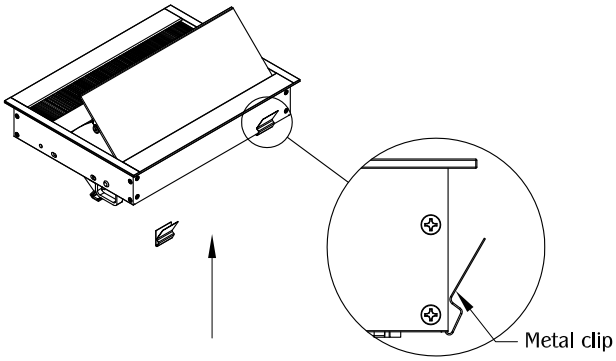

Place metal clips near the ends of the back of the unit. (NOTE: Metal clips are for use in hard surface material only as an optional mounting means.)

3

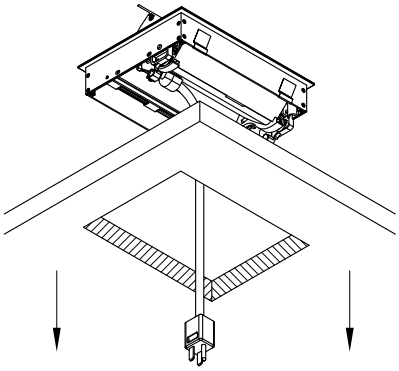

Guide the power cord through the cut out. Install the unit into the cut out and make sure it is fully leveled onto the surface.

4

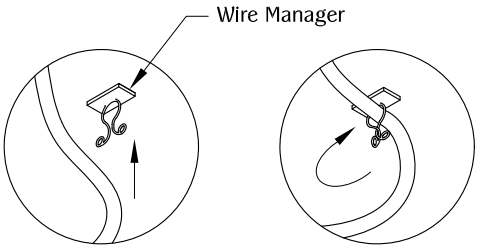

Optional wire manager.

5

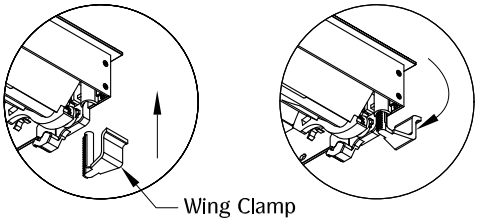

Secure unit by turning bottom wing clamp.

TABLE OF CONTENTS:

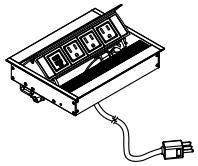

. . . . . 1X PCS50BU1

. . . . . 1X Wire manager

. . . . . 2X Metal clip

. . . . . 2X Wing clamp

2021.03.26