MOCKETT

DOUG MOCKETT & COMPANY, INC.

310.318.2491 • 800.523.1269 • www.mockett.com

PART #
PCS46/STL-U

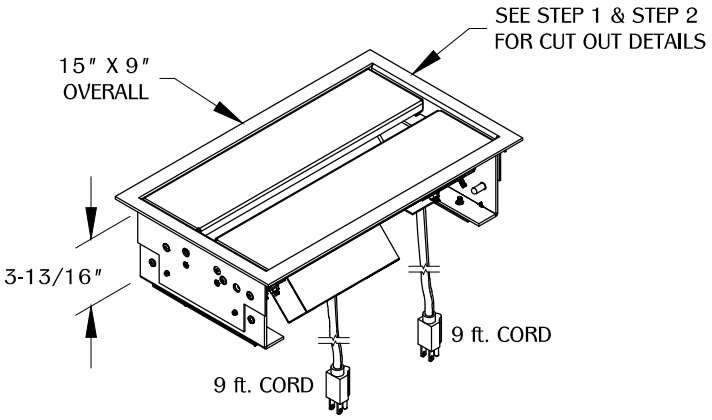

Note: Unit requires an undercut to allow the lid to swing freely. Please review the following instructions before installation.

1

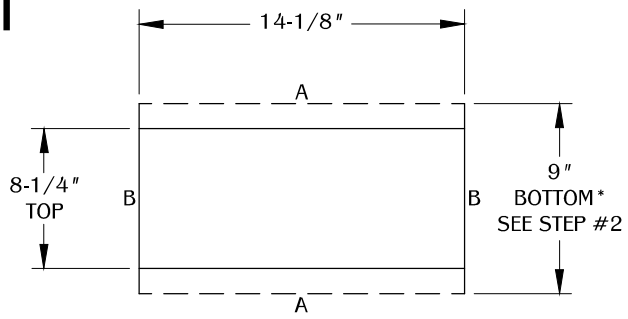

Determine the position and location of the unit on the work surface. Cut the hole at 14-1/8" X 8-1/4" from the top.

2

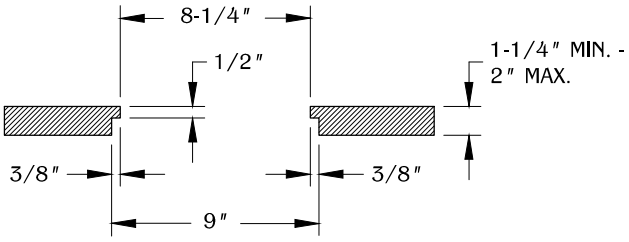

Rout out an additional 3/8" wide from under the front and rear of the cut out, providing a 14-1/8" x 9" recess. Leave 1/2" depth from the top of the cut out.

3

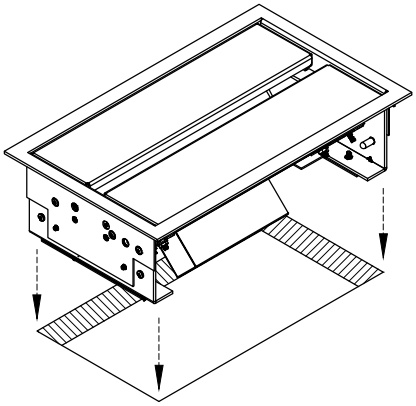

Install the unit into the cut out and be sure it is fully level on the surface.

4

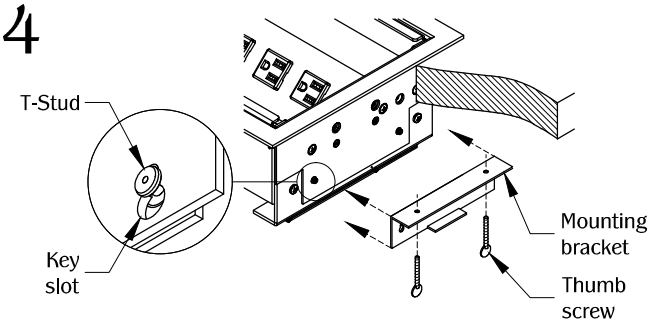

Align the mounting bracket key slots to the T-studs under the unit. Use the thumb screw to tighten and secure in place.

5

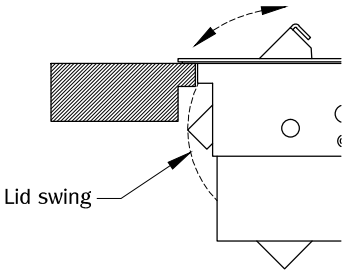

Make sure the lid operates smoothly in the cut out. Make additional adjustments if necessary. Plug the unit into nearby outlet (outlet should be close enough to where power cord is not taut or strained) and unit is ready for use.

TABLE OF CONTENTS:

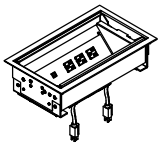

.....1 X PCS46/STL-U

.....2 X Mounting plate

.....4 X Thumb screw