MOCKETT

DOUG MOCKETT & COMPANY, INC.

PART # PCS26/SM

310.318.2491 • 800.523.1269 • www.mockett.com

1. Drop the power and communication cords between work surface and panel or wall.
2. Attach locking cam to clamp behind the work surface after unit is seated.
3. Tighten the knob until the unit is secure.

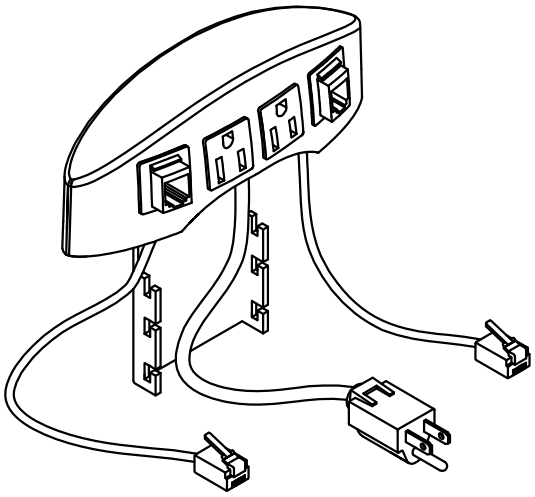

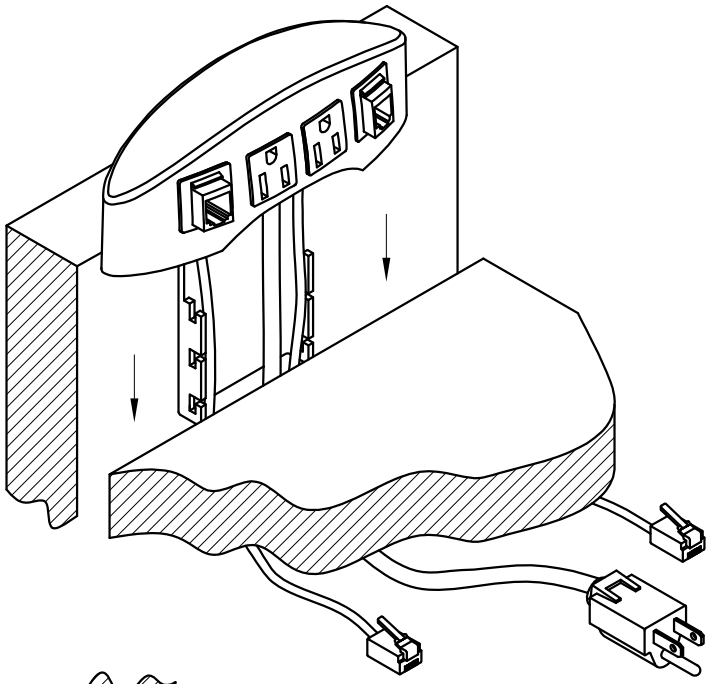

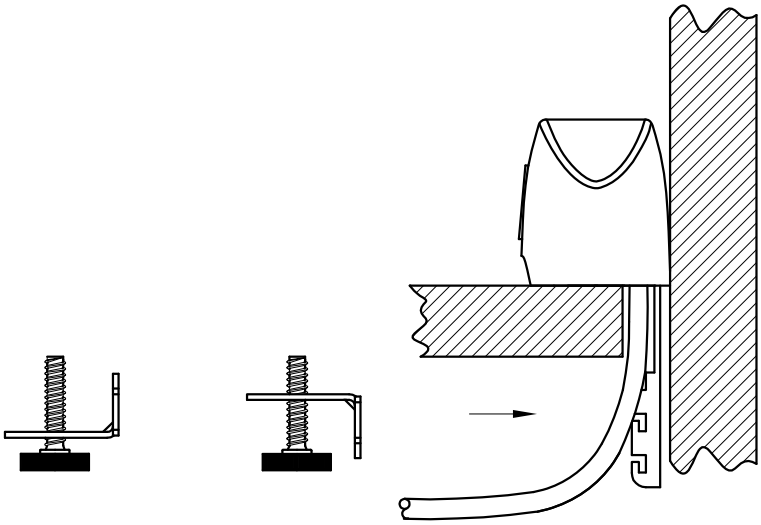

MOCKETT

DOUG MOCKETT & COMPANY, INC.

Part #

PCS DATA TREE

310.318.2491 • 800.523.1269 • www.mockett.com

INSTALLATION INSTRUCTIONS FOR VOICE/DATA ADAPTER KIT & BASE PLATE

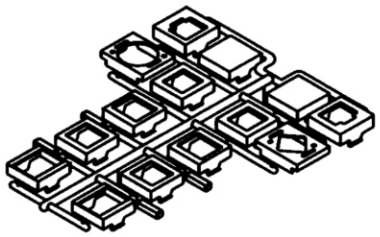

1. Select the appropriate voice/data adapter from the chart below (example: Avaya coupler/jack would use "AA" adapter).

*Jacks & couplers sold separately, UL Listed (DUXR) or Recognized (DUXR2) jacks/couplers required.

Note: Adapters accommodate coupler/jacks by the following manufacturers:

Adapter	Adapter Opening	Manufacturer	Website
AA	.654 X .700	Avaya/AT&T/Lucent Technologies	www.Avaya.com
BB	.594 X .792	Amp/Tyco	www.Amp.com
BB	.594 X .792	Panduit, Keystone Type	www.Panduit.com
BB	.594 X .792	Allen Tel	www.Allentel.com
BB	.594 X .792	Leviton	www.Leviton.com
CC	.594 X .752	Amp/Tyco	www.Amp.com
CC	.594 X .752	Krone	www.Krone.com
CC	.594 X .752	Hubbell	www.Hubbell.com
DD	No Opening	Blank (no coupler/jack)	
EE	.665 X .930	Ortronics TracJack	www.Ortronics.com
FF	.626 X .660	Panduit Mini-Com Connectors	www.Panduit.com
GG	.953 Diameter	Microphone jack/3-pin XLR	
HH		Video Monitor jack/DB-15	

2. Snap voice/data jack into adapter following the instructions provided with the jack.

3. Once assembled, snap adapter into the notched, square holes in the orientation shown.
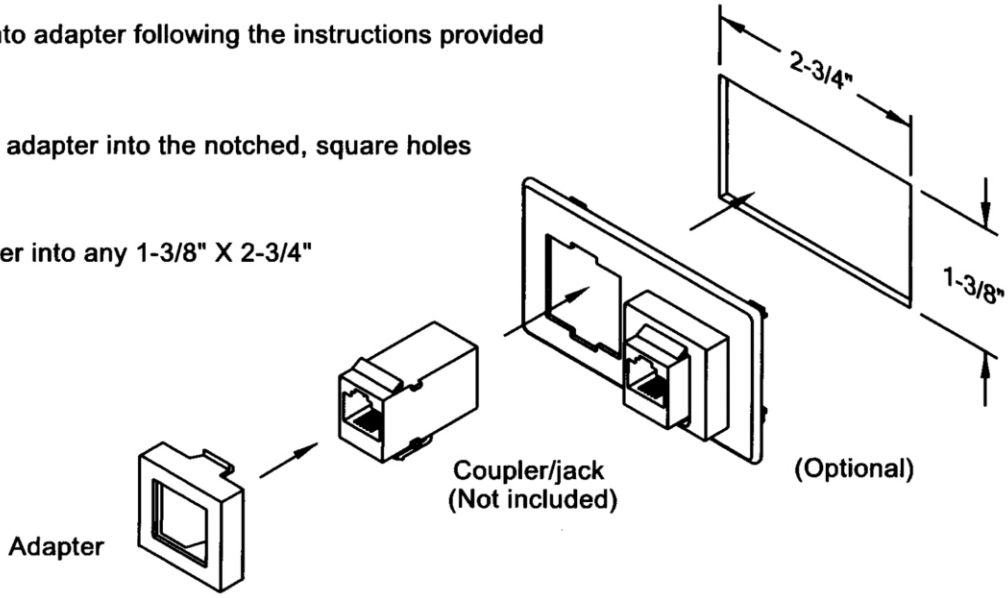
4. If provided, snap adapter into any 1-3/8" X 2-3/4" opening.