MOCKETT

DOUG MOCKETT & COMPANY, INC.

PART # PCS111A

310.318.2491 • 800.523.1269 • www.mockett.com

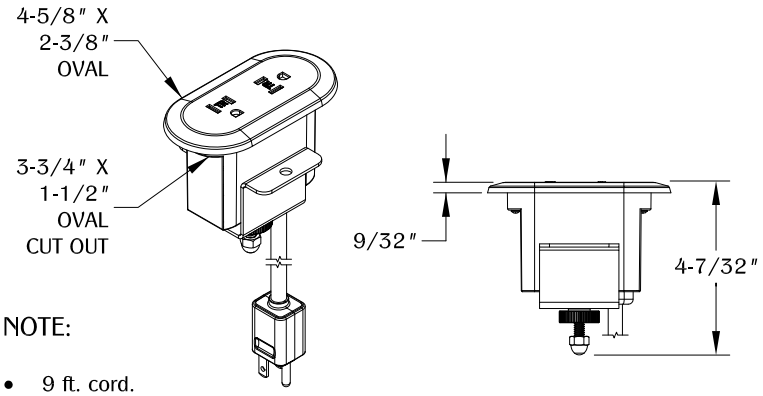

FRONT VIEW

NOTE:

- 9 ft. cord.
- Table thickness is 1-1/8" MIN. to 1-3/4" MAX. (1-3/4" table thickness does not require end cap).
- Plug dimension is 1-11/32" x 1-1/32" x 7/8".

1

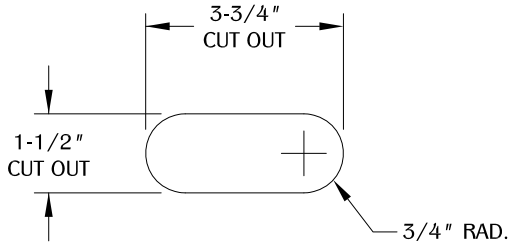

Make a cutout in the desired location on your work surface. Allow enough clearance for unit operation. DO NOT place unit where the cable is strained or trapped.

2

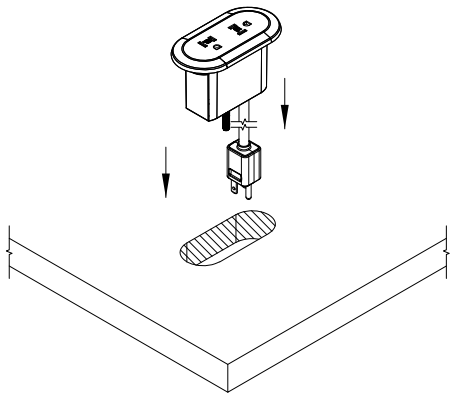

Guide the cord through the cut out. Install the unit into the cutout and make sure it is fully level on the surface.

3

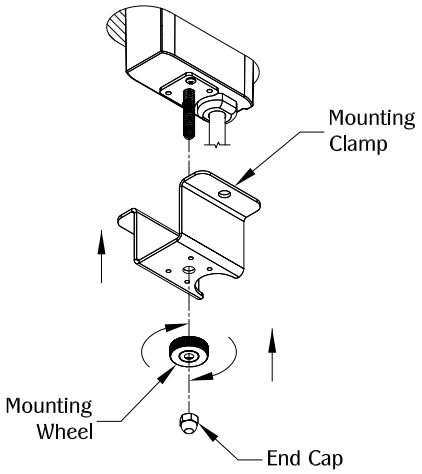

Attach the mounting clamp from underneath the work surface by turning the mounting wheel clockwise until unit is secure. Screw on the end cap. (Note: End cap will not be used when unit is installed on 1-3/4" table thickness.)

4 (OPTIONAL)

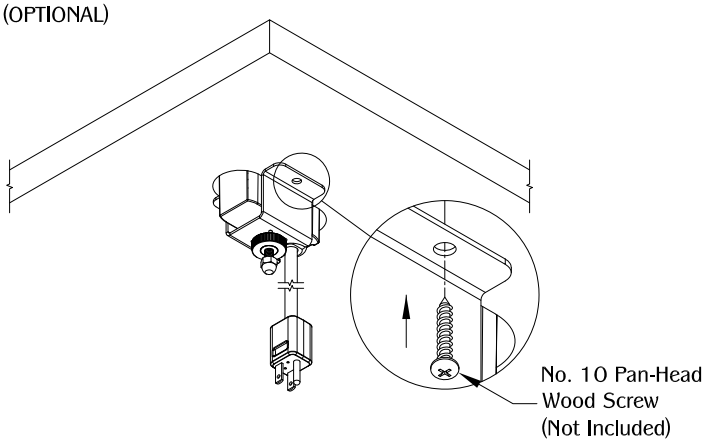

Use (2) pan-head screws to completely secure unit if necessary.

TABLE OF CONTENTS:

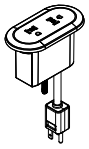

. . . . . 1X PCS111A

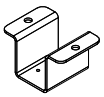

. . . . . 1X Mounting Clamp

. . . . . 1X Mounting Wheel

. . . . . 1X End Cap

2021.06.15