MOCKETT

DOUG MOCKETT & COMPANY, INC.

PART # DP120

310.318.2491 • 800.523.1269 • www.mockett.com

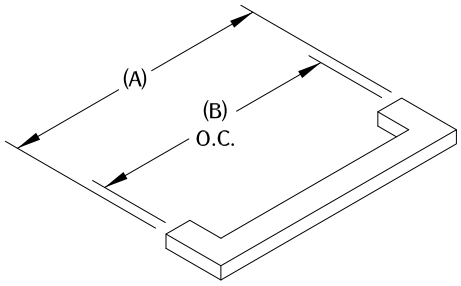

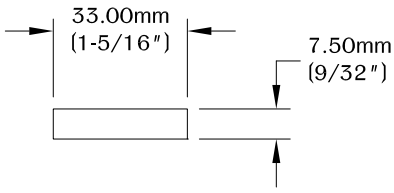

RIGHT VIEW

PART#	(A)	(B)
DP120A	142.00mm (5-19/32")	128.00mm (5-1/32")
DP120B	174.00mm (6-27/32")	160.00mm (6-5/16")
DP120C	238.00mm (9-3/8")	224.00mm (8-13/16")

1

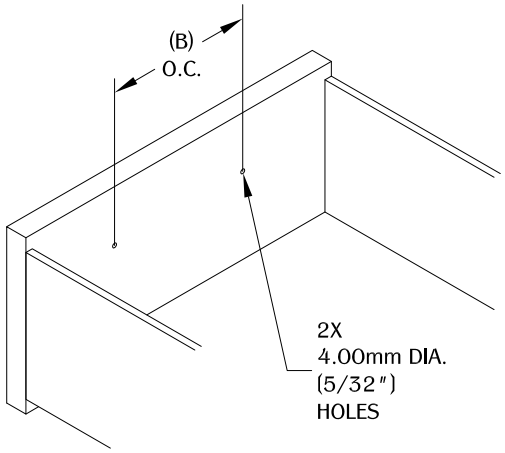

Determine the position and location of the part on the work surface. Mark the mounting positions and drill the holes for the mounting hardware.

2

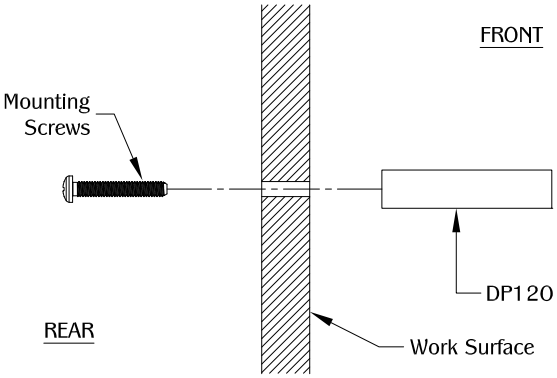

SIDE VIEW

Use (2) screws to secure the part to the work surface. Make sure the part is fully level on the work surface.

NOTE:

- Additional mounting screw lengths available upon request.
- All dimensions have a + / - 1/32" tolerance. We do not recommend drilling or cutting any holes before receiving a product or a product sample.

TABLE OF CONTENTS:

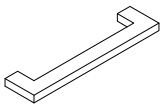

.....1X DP120

.....2X 1"
4mm-70 thread
Machine screws

2021.05.27