MOCKETT

DOUG MOCKETT & COMPANY, INC.

310.318.2491 • 800.523.1269 • www.mockett.com

DP299 SERIES

PROPRIETARY AND CONFIDENTIAL.
ALL DIMENSIONS HAVE A +/- 1/16" TOLERANCE UNLESS OTHERWISE SPECIFIED. WE DO NOT RECOMMEND DRILLING OR CUTTING ANY HOLES BEFORE RECEIVING A PRODUCT OR A PRODUCT SAMPLE.

SPECIFICATIONS

- Additional mounting screw lengths available upon request.

	(A) Length	(B) O.C.	(C) Projection
DP299A	185.00mm (7-9/32")	160.00mm (6-5/16")	29.00mm (1-5/32")
DP299B	217.00mm (8-17/32")	192.00mm (7-9/16")	30.00mm (1-3/16")
DP299C	347.00mm (13-21/32")	320.00mm (12-19/32")	32.00mm (1-1/4")

TABLE OF CONTENTS

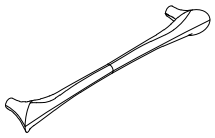

. . . . . 1X DP299

. . . . . 2X 1"
M4 X 0.70 Thread
Mounting Screw

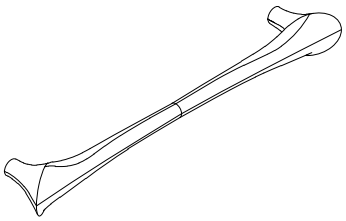

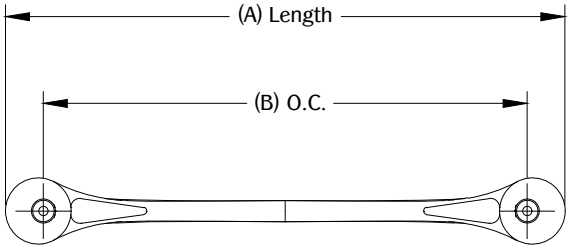

REAR VIEW

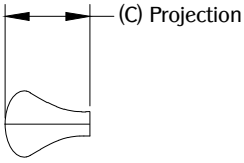

SIDE VIEW

1

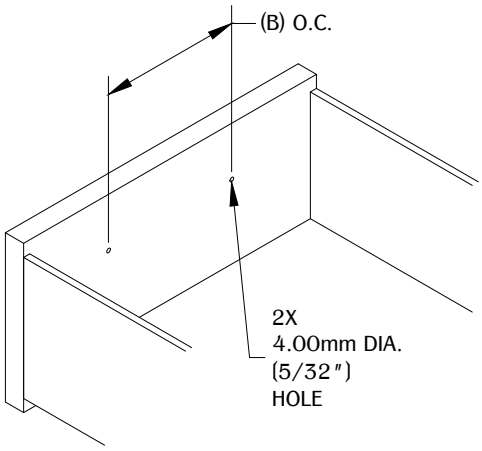

Determine the position and location of the part on the work surface. Mark the mounting positions and drill the hole for the mounting hardware.

2

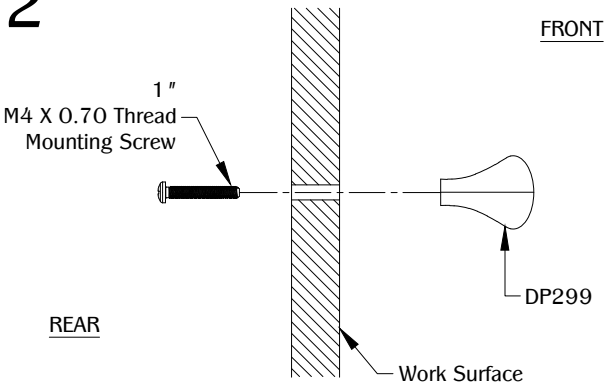

SIDE VIEW

Use (2) 1" M4 X 0.70 thread mounting screw to secure the part to the work surface. Make sure the part is fully level on the work surface.